VIXEN

RS200SS Tele-Extender

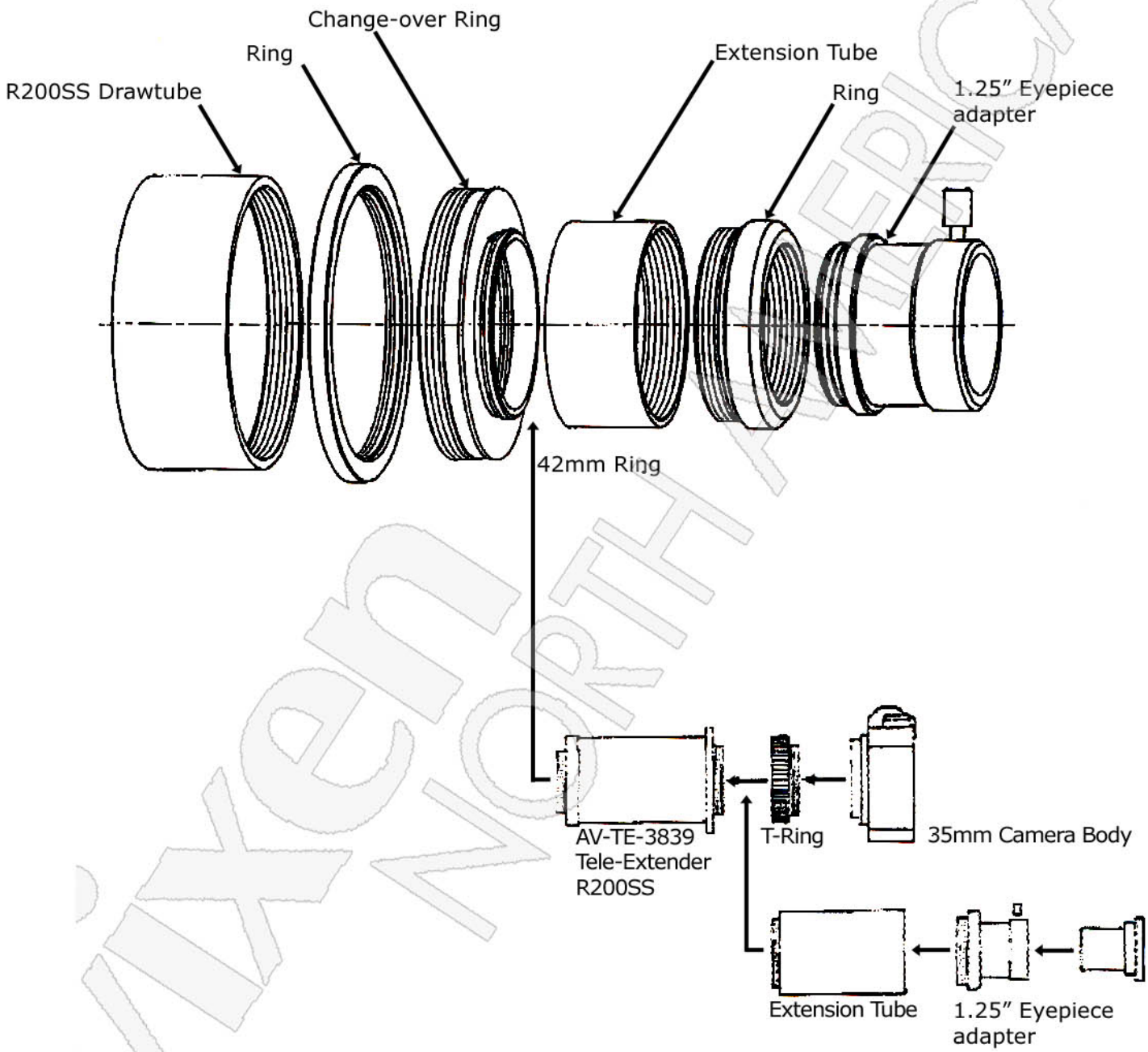

VixenAmerica.com